FIBERGLASS LINE HARDWARE

FLH3 SERIES C2

TRIPLE PHASE 0° CUTOUT & ARRESTOR BRACKETS

SPECIFICATIONS

BASE: ALUMINUM, 356-T6
ROD: SOLID, ELECTRICAL GLASS ROVING WITH ULTRA-VIOLET INHIBITORS. VEIL COATED.
FITTING: ALUMINUM, 356-T6
HARDWARE: STEEL, HOT DIP GALVANIZED

CATALOG NUMBER	PHASE SPACING "A" INCHES	PHASE SPACING "B" INCHES	MINIMUM ULTIMATE LOAD (LBS)		
STANDARD COATING			VERTICAL A	LONG B	TRANS. C
FLH30-1-3613-C2	36	13	1200	900	10,000
FLH30-1-3618-C2	36	18	1200	900	10,000
FLH30-1-4813-C2	48	13	900	700	10,000
FLH30-1-4818-C2	48	18	900	700	10,000

RECOMMENDED WORKING LOAD 50% OF RATING LISTED

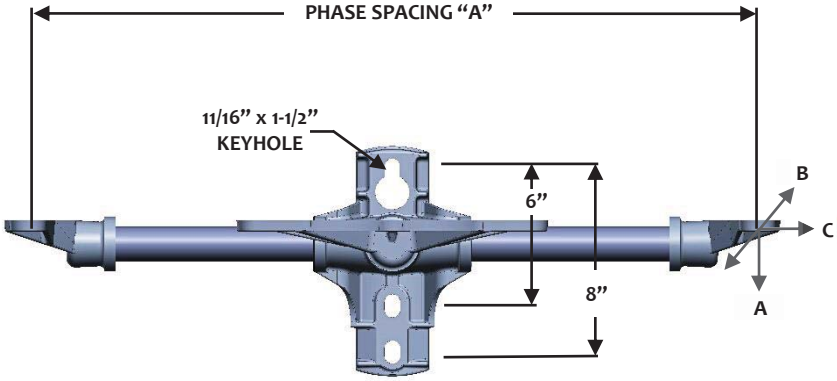

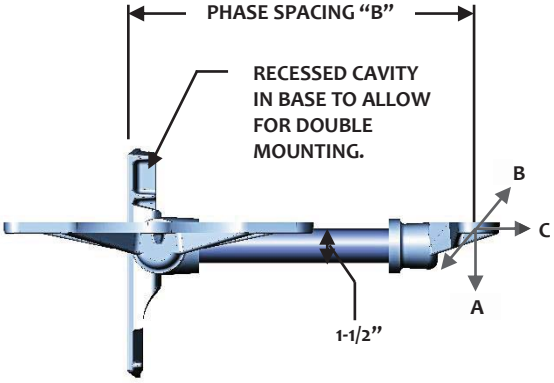

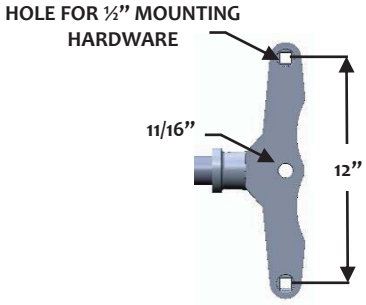

NOTE:
FOR OTHER LENGTHS PLEASE CONTACT US.
FOR BRACKET WITH (2) 1/2" CAPTIVE CARRIAGE BOLTS, SHAKEPROOF WASHERS, LOCK WASHERS AND HEX NUTS, ADD SUFFIX "H" TO CATALOG. (EXAMPLE: FLH30-1-3613C2-H)
TO SPECIFY SILICONE COATED ROD, ADD SUFFIX "SC" (I.E. = FLH30-1-3613-C2-SC)